大功率无感模块电阻 High-power non-inductive module resistor

HPK400-F01型 / HPK400-F01 series

应用 Application

—— HPK400型通用大功率电阻器 （厚膜，无感设计）。可应用于发电、高压直流输电、变频器、变速驱动,电力机车，船舶驱动等电工设备领域。
HPK400 type universal high-power resistor (thick film, non-inductive design). It can be applied to electrical equipment fields such as power generation, high-voltage direct current transmission, frequency converters, variable speed drives, electric locomotives, and ship drives.

产品特点 Product features

—— 底板中心温度≤85℃时，额定功率400W
—— When the temperature at the center of the base plate is ≤ 85℃, the rated power is 400W
—— 特殊设计的外型结构，芯片固定与外壳内，外壳用四个M4螺丝固定安装在散热器表面，能保证散热片附着压力在120N到160N之间。
—— The specially designed external structure has the chip fixed inside the housing, which is mounted on the surface of the heat sink with four M4 screws, ensuring that the attachment pressure of the heat sink is between 120N and 160N.
—— 特殊的电阻材料可以保证电阻具有较低的电感值和电容值，保证电阻在大功率和脉冲条件下的稳定性。
—— Special resistance materials can ensure that the resistor has low inductance and capacitance values, guaranteeing its stability under high-power and pulse conditions.
—— 特殊的高绝缘材料使电阻具有较大的爬电距离和空气间隙
—— Special high-insulation materials enable the resistor to have a large creepage distance and air gap
—— 原材料通过了UL94-V0
—— The raw materials have passed UL94-V0

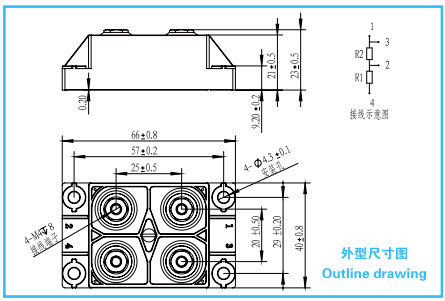

订货示例 Order Example

—— 型号-阻值-精度-引出端结构-引出端螺母
Model - Resistance - Accuracy - Terminal Structure - Terminal Nut
HPK400-440R-2%-(1/2)-M5

电气规格 Electrical specifications

阻值范围 Resistance range：1.0Ω～1MΩ
阻值精度 Resistance accuracy：±2%(G)，±3%(F)，±5%(J)，±10%(K)
温度系数Temperature coefficient：±150ppm/C（25℃~105℃），其它温度系数要求可协商订货
soil 150ppm/C (25℃~105℃), other temperature coefficient requirements can be negotiated during ordering
额定功率 Rated power：85℃额定功率400W，最大工作电压不超过5,000VDC。
400W at 85℃, with a maximum operating voltage not exceeding 5,000VDC.
短时间过负荷 Short-term overload：700W，70℃，10秒，AR≤±（0.4%R +0.001Ω）。
700W, 70℃, 10 seconds, AR≤±(0.4%R +0.001Ω).
峰值电流 Peak current：在低阻值和窄脉冲条件下，最高可达1500Amp。
Under low resistance and narrow pulse conditions, it can reach up to 1500Amp.
绝缘层耐压 Insulation withstand voltage：6KVrms，50Hz，1min，根据要求最高可达12KVrms，1min。
up to 12KVrms, 1min upon request.
局部放电 Partial discharge：4KVrms，<10pC；根据要求最高可达7KVrms<10pC。up to 7KVrms <10pC upon request.
绝缘阻值 Insulation resistance：500V，最小10GΩ。
爬电距离 Creepage distance：最小42mm
空间距离 Spatial distance：最小14mm
电感 Inductance：≤80nH
分布电容 Distributed capacitance（Mass）：≤110pF
分布电容 Distributed capacitance（Parallel）：≤40pF
耐湿特性 Moisture resistance：56天/40℃，RH≥95%，AR≤±（0.25%R+0.001Ω）。56 days/40℃, RH≥95%, AR≤±(0.25%R+0.001Ω).
温度循环 Temperature cycling：-55℃/+125℃（各0.5h），5个周期，AR≤±（0.2%R+0.001Ω）。
-55℃/+125℃ (each for 0.5h), 5 cycles, AR≤±(0.2%R+0.001Ω).
高频振动 High-frequency vibration：MIL-Std-202，方法204，条件D，AR≤±（0.2%R+ 0.001Ω）。
MIL-Std-202, Method 204, Condition D, AR ≤ ± (0.2%R + 0.001Ω).
功率耐久性 Power durability：额定功率1,000h，底板温度85℃，AR≤±（0.4%R+0.001Ω2）。
rated power for 1,000 hours, base plate temperature at 85℃, AR≤±(0.4%R+0.001Ω2).
工作温度范围 Operating temperature range：-55℃~+155℃
引出端安装 Lead-out terminal installation：M5/M4螺丝，最大扭矩2.0Nm。M5/M4 screws, with a maximum torque of 2.0 Nm.
工厂、型式试验 Factory and Type Test Report：Q/HLF02-2023